RoHS 2002/95/EC

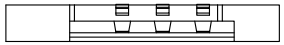

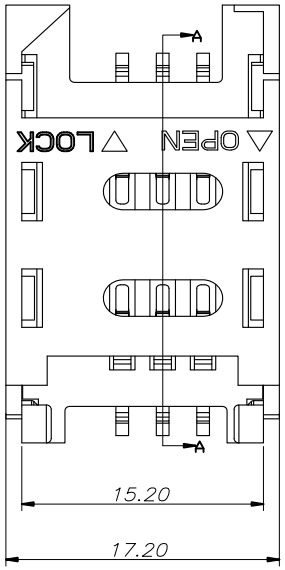

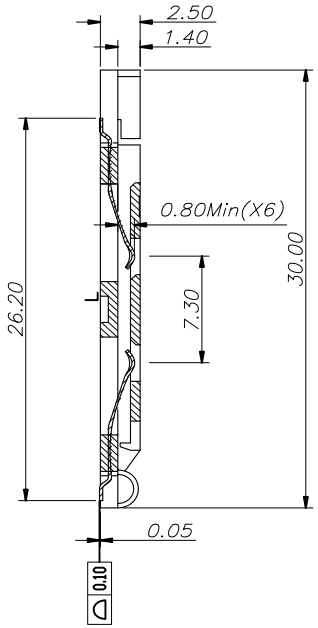

SEC A-A

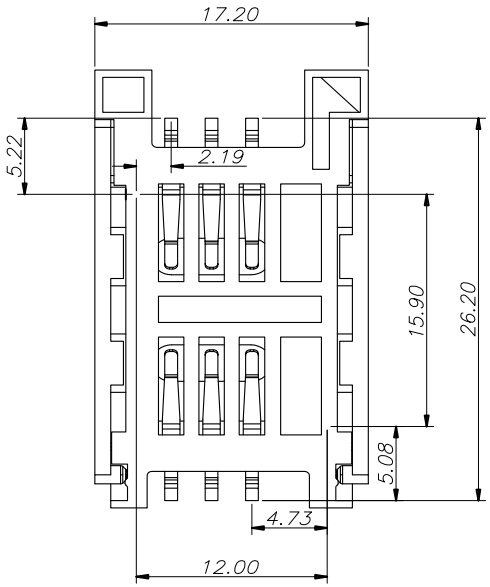

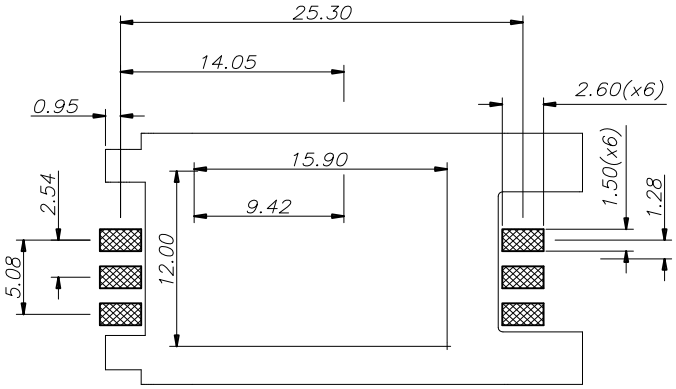

RECOMMEND PCB LAYOUT
TOLERANCE± 0.05MM
TOP VIEW

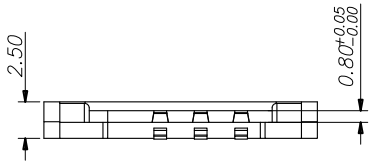

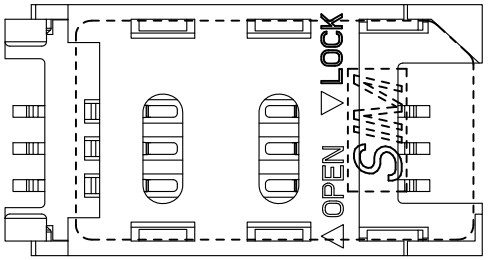

STATE OF LOCK

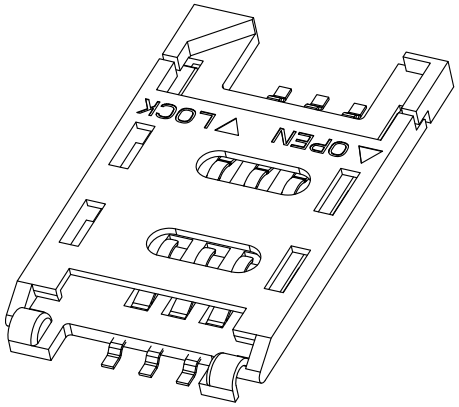

A.Material:
1.Insulator:High temperature thermoplastic 9T UL94V-0,(BLACK)
2.Pho.Bronze:Plating,
50-80U" MIN NICKEL UNDERPLATED;
1-3U" GOLD ON THE CONTACT AREA;
80U" TIN PLATING ON SOLDER TAIL

B.Electrical specifications:
Voltage rating: 12 V AC
Current rating: 0.5A
Dielectric strength: 500V AC for 1 minute min
Insulation resistance: 1000 M ohm
Contact resistance: 50 mill.ohm max
Operation temperature: -40℃ to +105℃
Product withstanding rff low soldering 260℃ for 10s

C.Mechanical specieications:
3.1 Durability: 5000 cycles

Wellco T&C Co., Ltd.	Gen.Tolerance .X ± 0.20 .XX ± 0.08 .XXX ± 0.05 ∠±1°	Scale	Not	P/N # 713W6-NP Sim card connector	This spec drawing is under the property of Wellco T&C Co., Ltd.	Rev. A Page 1-1	DRW by Amy July 07 2015 CHK by Long July 11 2015 APP by Chin July 11 2015
		Unit	mm				
		Size					