MECHANICAL:

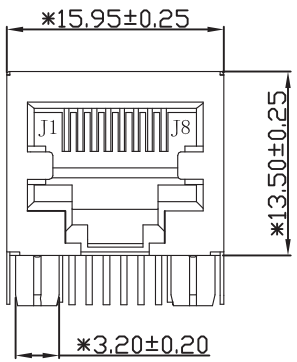

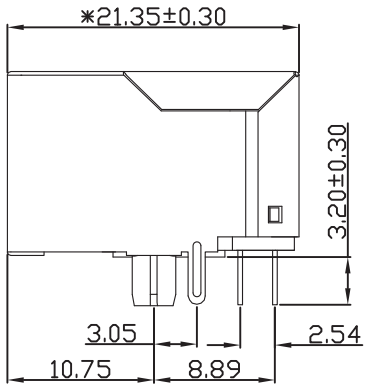

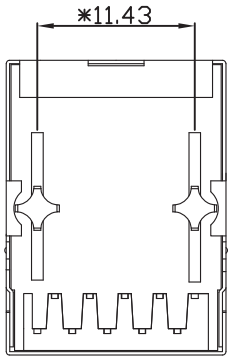

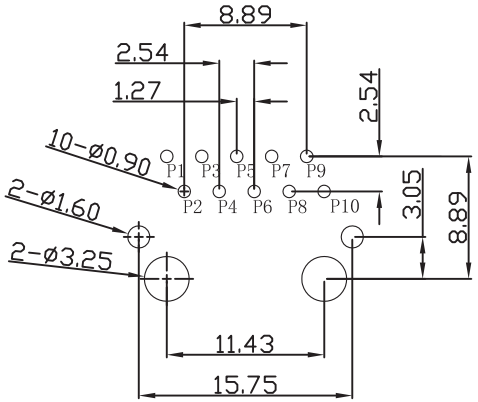

P.C.B RECOMMENDED HOLE LAYOUT SEEEN FROM COMPONENT SIDE.
ALL CENTERLINE DIMENSIONS ARE BASIC

Metal Shell :Copper Alloy，Finish：30u" Nickel
Housing :Thermoplastic,PA46,UL 94V-0,Black
Insert :Thermoplastic,PBT,UL 94V-0,Black
Contact Terminal/phosphor Bronze
30u" Gold on Contact Area，100u" Tin on Solder，
Both over 50u" Nickel Under-Plated
Coil Base :Henolic,PF2A5-151J,UL 94V-0,Black
Terminal/Copper Alloy T=0.40X0.40mm Thickness

Meets or exceeds IEEE 802.3 standard for 10/100/1000 Base-T
350uH minimum OCL with 8mA Bias current
Available with or without LEDs
Minimum 1500Vrms isolation per IEEE802.3 requirement
Operating temperature -40°c to +85°c
Storage temperature -40°c to +85°c

Wellco T&C Co., Ltd.

A0	RELEASED	Liu	2025-04-21
REV	DESCRIPTION.	APPD.	Date

FILE NO : HRK1(Series)	TITLE 圖 名	RJ45 Connector With Transformer 1000Base Tab-down 1x1 Port		UNIT 單位	mm inch
TOLERANCE(公差) : 0.000 mm ± 0.10 mm 0.00 mm ± 0.25 mm 0.0 mm ± 0.30 mm	PART NO. 料 號	HRK1-1BEG03-5A2BB-1R		SCALE 比 例	1 : 1
	DRAWN BY 製 圖	Liu	DATE 日 期 2025-04-21	REV. 版 本	A.0
	CHECKED BY 審 核	Zhu	DATE 日 期 2025-04-21		

ELECTRICAL SPECIFICATIONS@25°C UNLESS OTHERWISE NOTED:

1.Turn Ratio(+/-2%):1CT:1CT

2.Inductance OCL:
350uH Min @100KHz 0.1V DC Bias 8mA

3.Insertion Loss:
-1.0dB Max @1-100MHz

4.Return Loss:
-20dB Min @1-10MHz load 100Ω
-18dB Min @10-40MHz load 100Ω
-14dB Min @40-60MHz load 100Ω
-12dB Min @60-80MHz load 100Ω
-10dB Min @80-100MHz load 100Ω

5.Cross talk:
-40dB Min @1-30MHz
-35dB Min @30-60MHz
-30dB Min @60-100MHz

6.Common Mode Rejection:
-30dB Min @1-100MHz

7.HIPOT TEST:1500Vrms 1mA.Max

SCHEMATICS:

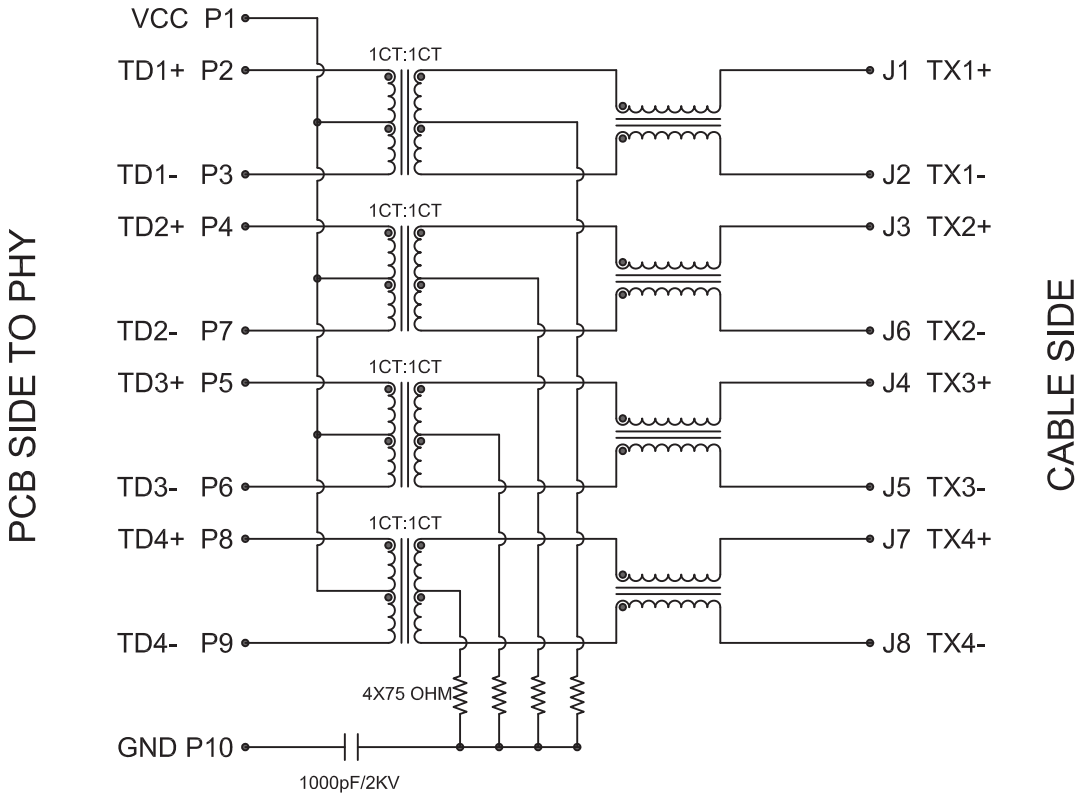

Wellco T&C Co., Ltd.

A0	RELEASED	Liu	2025-04-21
REV	DESCRIPTION.	APPD.	Date

FILE NO : HRK1(Series)	TITLE 圖 名	RJ45 Connector With Transformer 1000Base Tab-down 1x1 Port		UNIT 單位	mm inch
TOLERANCE(公差) : 0.000 mm ± 0.10 mm 0.00 mm ± 0.25 mm 0.0 mm ± 0.30 mm	PART NO. 料 號	HRK1-1BEG03-5A2BB-1R		SCALE 比 例	1 : 1
	DRAWN BY 製 圖	Liu	DATE 日 期 2025-04-21	REV. 版 本	A.0
	CHECKED BY 審 核	Zhu	DATE 日 期 2025-04-21		

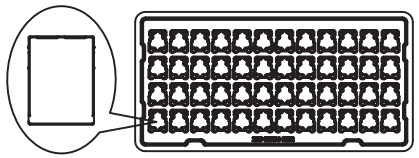

图一(FIGURE 1)
48PCS/盘(48PCS/TRAY)

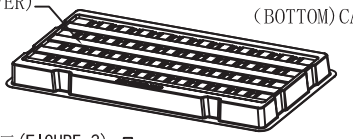

图二(FIGURE 2)

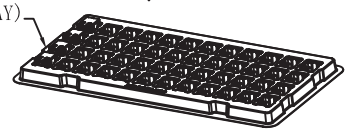

图三(FIGURE 3)

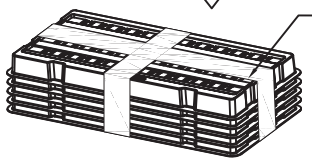

图四(FIGURE 4)

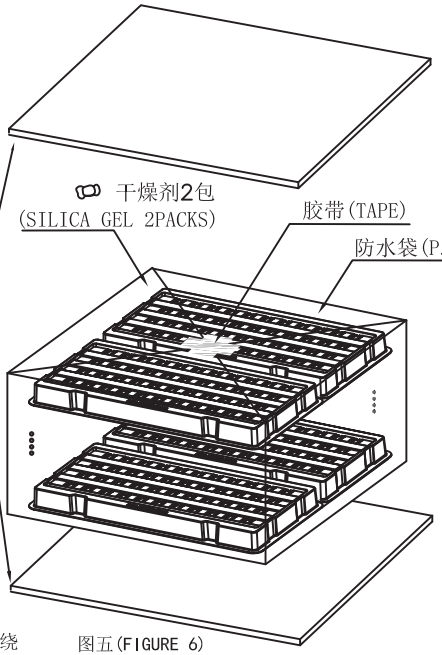

图五(FIGURE 6)

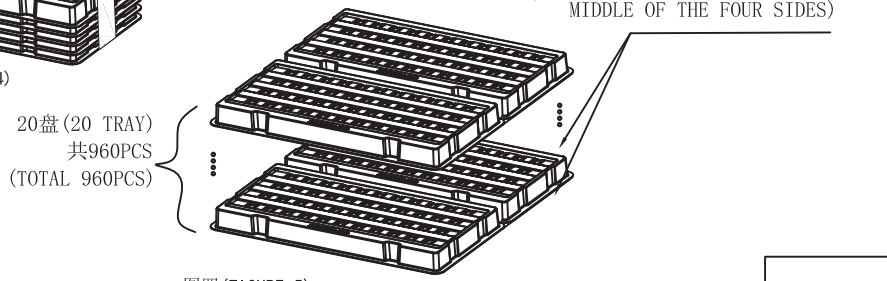

图四(FIGURE 5)

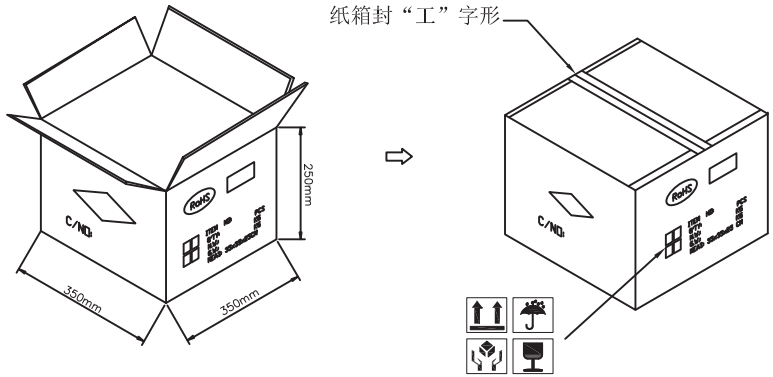

包装說明:

1.將成品按其外觀形狀放入底座對應的凹槽中，功能面朝底座底部(如圖示一所示)。
POSITIONED COMPONENTS INTO MATCHING CAVITY OF TRAY, FUNCTION FACE TO BOTTOM.(FIGURE 1)
每盤TRAY，放滿48PCS成品，不可少放或錯放。
48 PCS/PER TRAY; ENSURE COMPONENTS POSITIONED AS REQUIREMENT.

2.將底座裝滿成品，然後蓋上上蓋(如圖示二、三所示)，並在四周貼小膠布;5盘为一叠用拉伸膜十字缠绕（如图四）
PLACE UPPER COVER AFTER BOTTOM TRAY IS PROPERLY LOADED OF COMPLETED PRODUCTS.(FIGURE 2、3), 4 SIDES OF PACKING TRAY TACK TAPE.5 DISCS IN A STACK WRAPPED WITH STRETCH FILM IN A CROSS PATTERN(FIGURE 4)
相疊至20盤共960PCS(如圖示五所示)。
STACK UP 20 STAPLED PACKING TRAYS OF TOTAL 960 PCS.(FIGURE 5)

3.成品置於TRAY後，注意每盤TRAY須配置一底座和一上蓋堆疊，且須按成品外觀形狀擺放。
EACH TRAY MUST ADD A COVER BEFORESTACK UP W/ OTHER COMPLETED PACKING TRAY. AND ORIENTATION OF PLACEMENT MUST MATCH PRODUCT SHAPE.

4..將完成步驟3，相疊20盤平置一個防水袋，再放入2包乾燥劑。
AFTER STEP 3, PLACE 20 STACKED UP TRAYS INTO A P.E. BAG AND ADD 2 BAG OF SILICA GEL.
將防水袋整齊折合後，以膠帶將其固定好(如圖示六所示)。
PROPERLY FOLDS THE P.E. BAG, AND FIX W/ TAPE(FIGURE 6).

5.先置入1PCS紙漿板於內箱底部，將完成步驟6之防水袋置入於外箱中,再置入1PCS紙漿板於TRAY頂部。
PLACE 1 PCS CARDBOARD AT BOTTOM OF OUTER BOX BEFORE THE COMPLETED P.E. BAG FROM 6 AND 1 PCS CARDBOARD ON THE TOP.

6.以膠帶封合，並貼上成品包裝標籤。
TAPE THE INNER BOX AND APPLY PROPER LABELS.

包 装 信 息	
每盘产品數	48pcs
每箱盘數	20盘
每箱产品數	960pcs

Wellco T&C Co., Ltd.

A0	RELEASED	Liu	2025-04-21
REV	DESCRIPTION.	APPD.	Date

FILE NO : HRK1(Series)	TITLE 圖 名	RJ45 Connector With Transformer 1000Base Tab-down 1x1 Port Packing		UNIT 單位	mm inch
TOLERANCE(公差) : 0.000 mm ± 0.10 mm 0.00 mm ± 0.25 mm 0.0 mm ± 0.30 mm	PART NO. 料 號	HRK1-1BEG03-5A2BB-1R		SCALE 比 例	1 : 1
	DRAWN BY 製 圖	Liu	DATE 日 期 2025-04-21	REV. 版 本	A.0
	CHECKED BY 審 核	Zhu	DATE 日 期 2025-04-21		